

Black Matt



White Matt



Silver Matt



Black Specular



Silver Specular



Gold Specular



Grey Specular

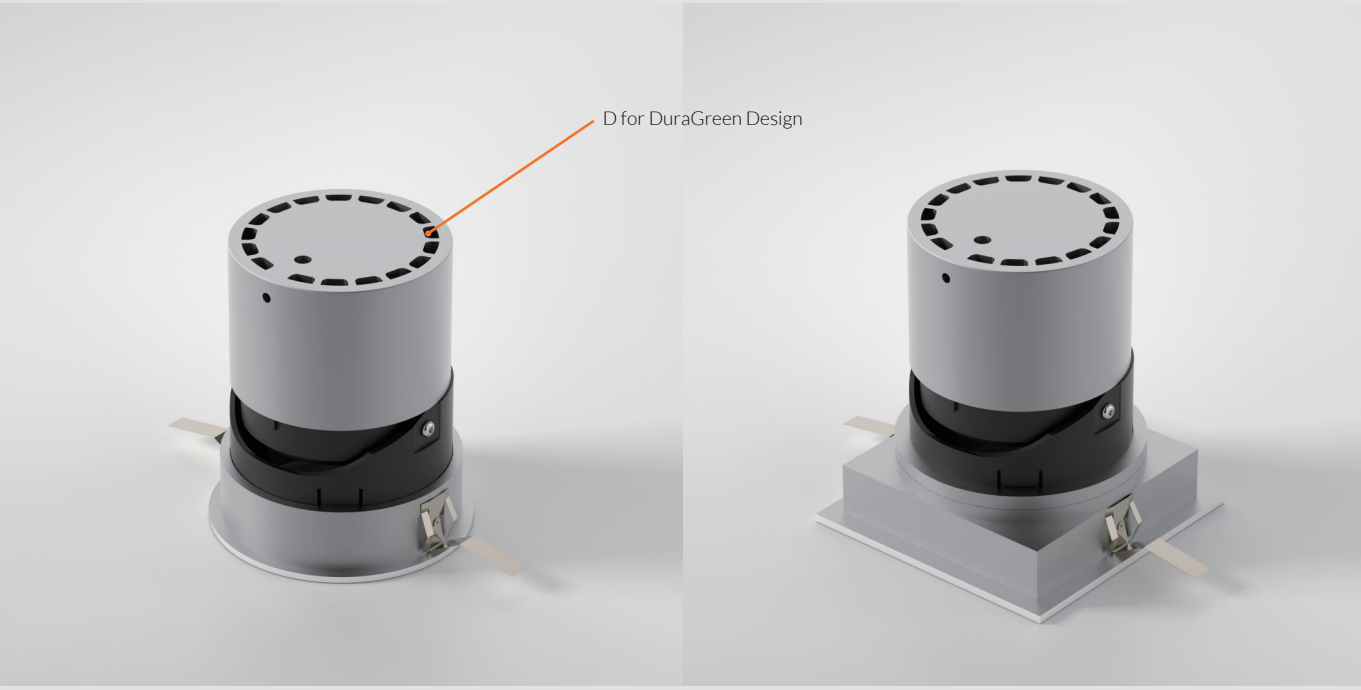

Specification Code

Type	Cut out	Power	Colour Temp	Driver	Beam Width		Bezel Colour	Baffle Colour	Options
MF	**75**	**08W**	**30**	**N**	**24**	**-**	**W**	**B**	**C**
MF/Fixed AF/Adjustable MFL/Lens type, Fixed AFL/Lens type, Adjustable MFW/Wall Wash MFZ/Zoomable MFP/Pinhole MFQ/Fixed Square	55/55mm 60/58mm 75/75mm 80/80mm 100/100mm		22/2200K 27/2700K 30/3000K 35/3500K 40/4000K 2760/2700K-6000K 22/2200K 1830/1800K - 3000K 1840/1800K - 4000K	P/Phase Cut D/DALI 0/0-10V Z/Zigbee C/Casambi N/Non Dim X/No Driver	05/5° 10/10° 13/13° 15/15° 20/20° 24/24° 30/30° 36/36° 50/50° 55/55° WS/Wall Wash		W/White B/Black PC/Polished Chrome PB/Polished Brass AB/Antique Bronze SN/Satin Nickel	B/Black Matt W/White Matt SM/Silver Matt GRS/Grey Specular BS/Black Specular SS/Silver Specular GOS/Gold Specular	C/Clear Lens F/Frosted Lens H/Honeycomb S/Spread Lens

MOOD

Ø100
Mini-Trim Adjustable Round Downlight



CUTOUT :100mm



Adjustable Optic



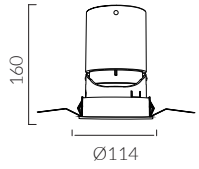

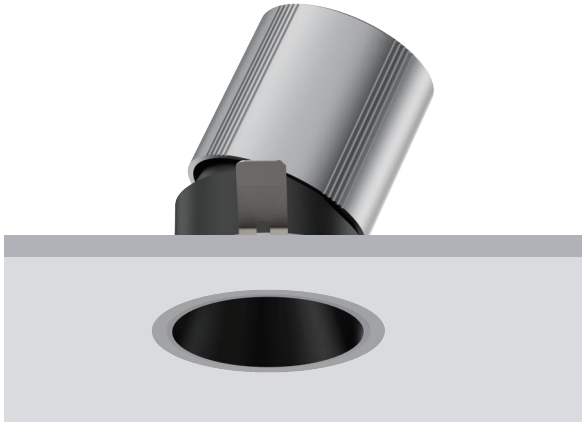

bezel



Black



White

baffle



Black Matt



White Matt



Silver Matt



Grey Specular



Black Specular



Silver Specular



Gold Specular



Bespoke

IP Rating:	IP20 and IP44 options
Optics:	15°/24°/36°/50°
UGR:	<10
CRI:	92Ra
Lifetime:	50,000 hrs (L90 B10)
CCT:	2700K / 3000K / 3500K / 4000K / 2700K-6000K
Typical Source Efficacy (lm/W):	110
Control:	On/off, Phase Cut, 0/1-10V, Dali, Zigbee, Casambi
Binning	2 Step MacAdams
Driver Input:	AC220-240V 50/60Hz
Electrical (System W):	DC 36V 500mA 20W DC 36V 600mA 25W DC 36V 750mA 30W
Ambient temp:	-20 ℃ to 25 ℃
Class:	III
Optional accessories:	Honeycomb, Elliptical Lens, Solite lens
Material:	Fine aluminium 6063A
Certifications:	CB, CE, RoHS, UKCA, GLOBAL MARK, CCC

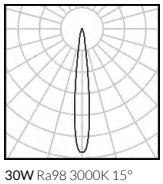

30W Ra98 3000K 15°

h(m)	E(lx)	D(m)
1.0	8966	0.28
2.0	2247	0.58
3.0	998	0.84
4.0	562	1.10
5.0	359	1.40
6.0	250	1.70

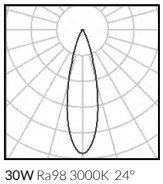

30W Ra98 3000K 24°

h(m)	E(lx)	D(m)
1.0	5888	0.39
2.0	1457	0.77
3.0	652	1.20
4.0	367	1.50
5.0	235	1.90
6.0	163	2.30

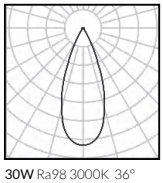

30W Ra98 3000K 36°

h(m)	E(lx)	D(m)
1.0	2991	0.54
2.0	748	1.10
3.0	332	1.60
4.0	187	2.20
5.0	120	2.70
6.0	83	3.20



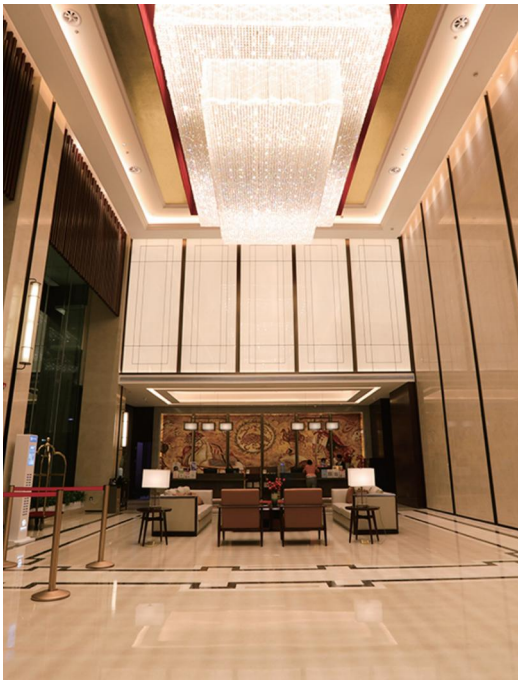

DuraGreen project:
Hua Tian Hotel

Code example:

AFL 100 30W-30 N 36-W B H

AFL/ adjustable
100 / cutout 100mm
30W / system power
30 / 3000K
N / non dim
36 / beam angle 36°
W/ white bezel
B/ black baffle
H/ Honeycomb（Optional）

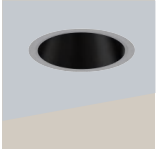

W system	lm system	optics	code
20W	1304	15°	AFL10020W-30N15
20W	1364	24°	AFL10020W-30N24
20W	1312	36°	AFL10020W-30N36
20W	1369	50°	AFL10020W-30N50

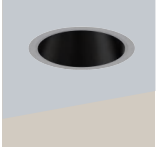

W system	lm system	optics	code
25W	1595	15°	AFL10025W-30N15
25W	1696	24°	AFL10025W-30N24
25W	1676	36°	AFL10025W-30N36
25W	1715	50°	AFL10025W-30N50

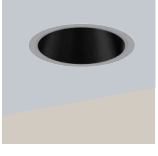

W system	lm system	optics	code
30W	1872	15°	AFL10030W-30N15
30W	1940	24°	AFL10030W-30N24
30W	1841	36°	AFL10030W-30N36
30W	1962	50°	AFL10030W-30N50